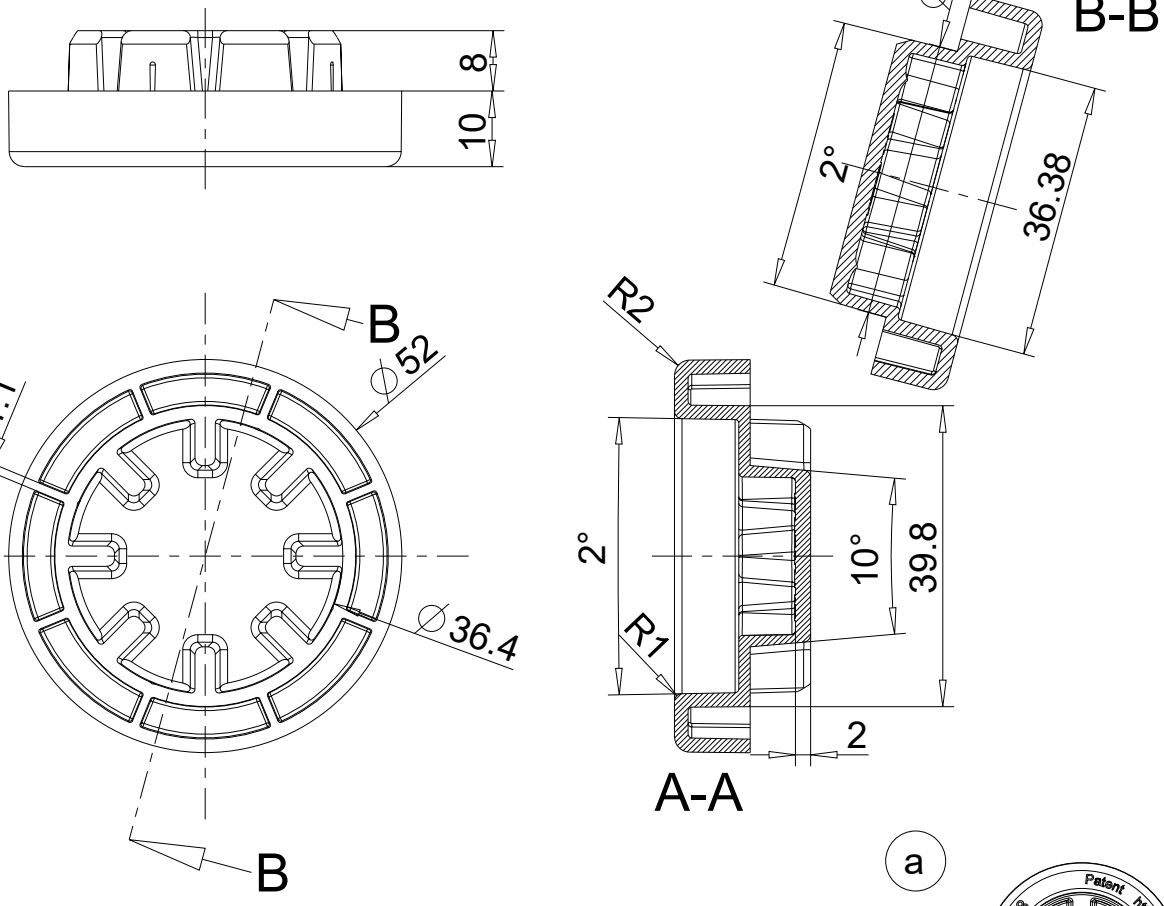

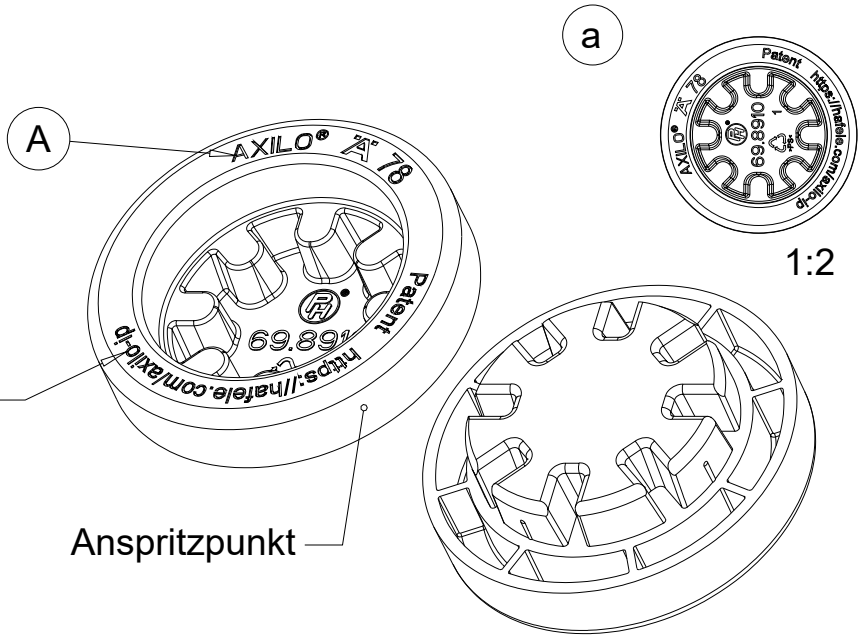

REVISION	-
ITEM/CATALOG NUMBER: 637.76.422	SUPPLIER NUMBER: 69.8909
TITLE: 10mm Spacer	
MATERIAL: PLASTIC	FINISH: BLACK
DRAWN BY: NPG	
APPROVED BY: SH	
DATE: 04.22.2024	
SCALE: NTS	
TOLERANCE SPECIFICATION: DIN 16742 TG6	ISO E
SIZE: A	SHEET 1 OF 1

NOTICE
THIS DRAWING AND ALL INFORMATION THEREON IS THE PROPERTY OF:
HÄFELE
THIS DRAWING AND INFORMATION THEREON IS CONFIDENTIAL. MUST NOT MADE PUBLIC, COPIED OR USED TO DISADVANTAGE OF SAID HÄFELE AMERICA CO. IT IS SUBJECT TO RETURN ON DEMAND. 2017