# StealthLock - Keyless, Invisible Electronic Cabinet Lock

**stealthlock.com**

StealthLock works via radio frequency which allows wireless locking of multiple cabinet openings.

The **Transmitter Pad** broadcasts the code entered to lock or unlock the cabinet door or drawer.




The Transmitter Pad can mount anywhere within 15 feet of the Receiver Latch without wires.

StealthLock is recommended for use on cabinets made from:

- Wood and wood products
- Phenolic Resin
- Glass



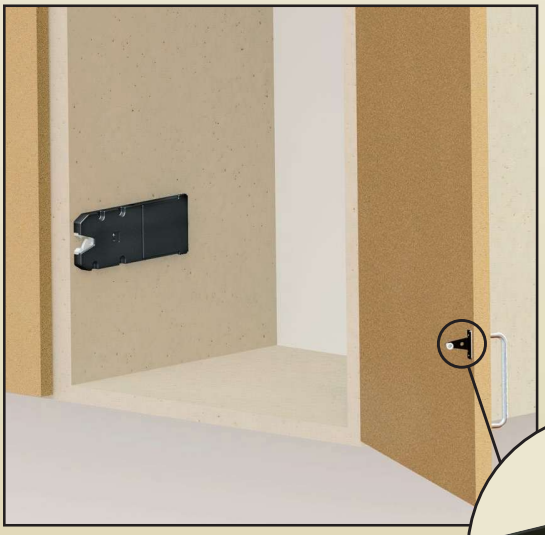



The **Strike Plate** is mounted on the door or drawer to be locked and interfaces with the Receiver Latch.




The **Receiver Latch** mounts inside the cabinet, hidden from view and receives lock or unlock instruction from the Transmitter Pad.

# StealthLock - Keyless, Invisible Electronic Cabinet Lock

**stealthlock.com**

## COMPONENTS

### TP-100 – Transmitter Pad

- Operates with CR2032 coin battery, included
- Low battery indicator

Available in two versions:

**Standard** – Use for most residential and general commercial applications

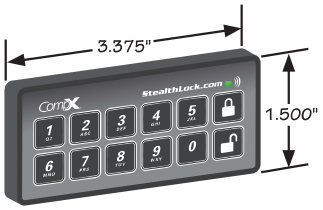


**Dedicated** – Use part number TP-150, special factory order, unique Transmitter Pad ID mates a Transmitter Pad to specific Receiver Latches. Ideal for lockers or users within close proximity of each other.

---

### RL-100 – Receiver Latch

- Programmable using Transmitter Pad
- One required per door or drawer
- Mounts within ½" drawer suspension
- Operates with 4 AAA batteries

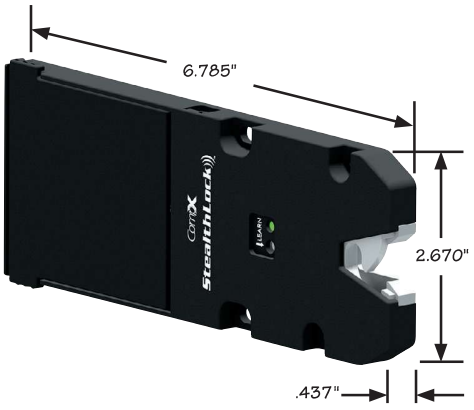


---

### SP-600 – Strike Plate

- For door and drawer use
- Fits within ½" drawer suspension

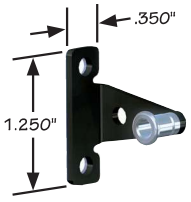


---

### TL-600 – Installation Tool

- Use to mount Receiver Latch and Strike Plate
- Included with the SL-100 and RL-110 kits

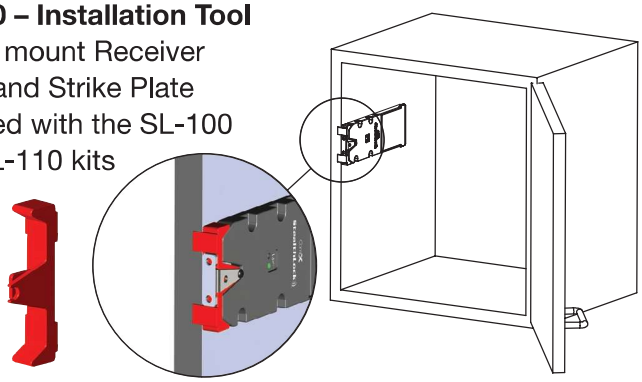

## KITS

### Standard version

#### SL-100 – StealthLock Kit

- Contains all parts necessary to lock one door or drawer
- Kit includes:
  - RL-100 – Receiver Latch
  - TP-100 – Transmitter Pad
  - SP-600 – Strike Plate
  - TL-600 – Installation Tool
  - required mounting screws

#### RL-110 – Receiver Latch Kit

- Contains all parts necessary to lock additional doors or drawers operated by existing Transmitter Pad
- Kit includes:
  - RL-100 – Receiver Latch
  - SP-600 – Strike Plate
  - TL-600 – Installation Tool
  - required mounting screws

### Dedicated version

#### SL-150 Dedicated Preprogrammed Kits

For medium to large projects

Transmitter pads and receiver latches can be programmed at the factory to a customer-provided schedule. They are then ready for installation. If needed, StealthLock's modes (passage, self-locking and single use) can be reprogrammed after installation.

To download the *SL-150 Preprogrammed Kit: How to Order* sheet, go to **stealthlock.com** or contact us for more information.



CompX TIMBERLINE

1-800-LOCKBAR • 1-847-752-2600 • 1-847-752-2420 FAX
**compxtimberline.com** • email: **timberlineorders@compx.com**

# ACCESSORIES

stealthlock.com

**MP-700 Satin Nickel** *(shown)*
**MP-300 Black**
**Mounting Plates**

- Mounting screws and template included

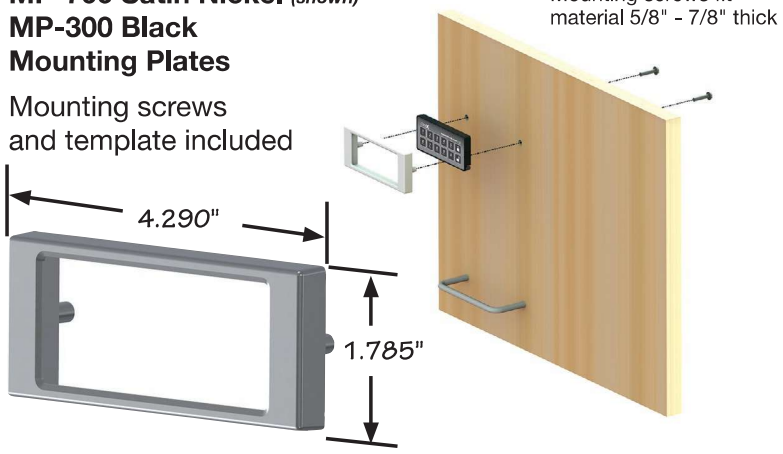




**MP-700-WM Satin Nickel** *(shown)*
**MP-300-WM Black**
**Wall-Mounting Plates**
Allows mounting plate to be affixed to wall or other surfaces where rear access is unavailable.

# AUXILIARY POWER SYSTEM

**RL-AP1 – Power Supply**

- Connects Receiver Latch to 120 VAC power
- Includes 5-1/2 foot cord

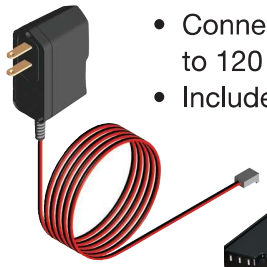

**RL-APC-9VJ-10 – Power Cord – 9V Jump**

- Provides emergency power to Receiver Latch using a 9 volt battery
- 10 foot cord length

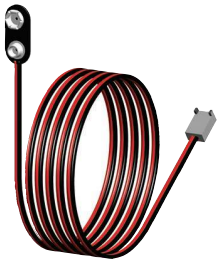



**RL-APC – Power Cord**

- Use to daisy chain Receiver Latches

Available lengths

- RL-APC-3 Power Cord – 3 ft.
- RL-APC-5 Power Cord – 5 ft.
- RL-APC-10 Power Cord – 10 ft.

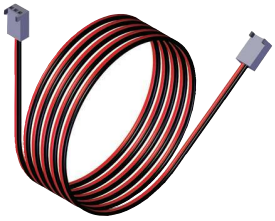

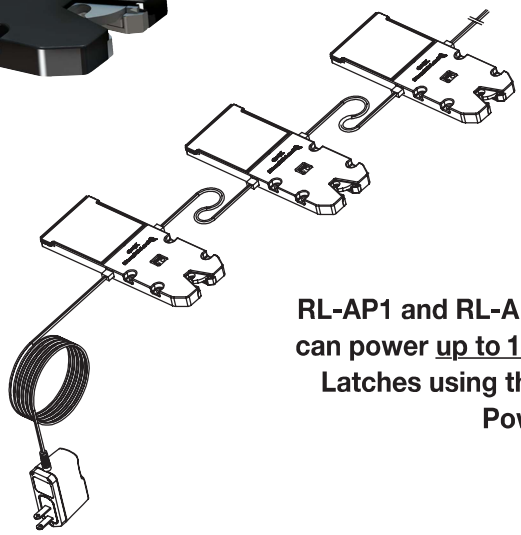

**RL-AP1 and RL-APC-9VJ-10 can power up to 10 Receiver Latches using the RL-APC Power Cords.**

**Visit stealthlock.com for programming and installation videos, frequently asked questions and more**