HÄFELE

568.60.710
568.60.723

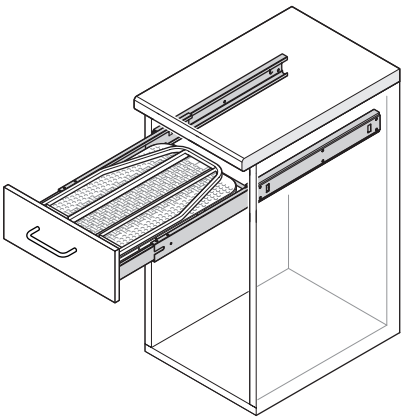

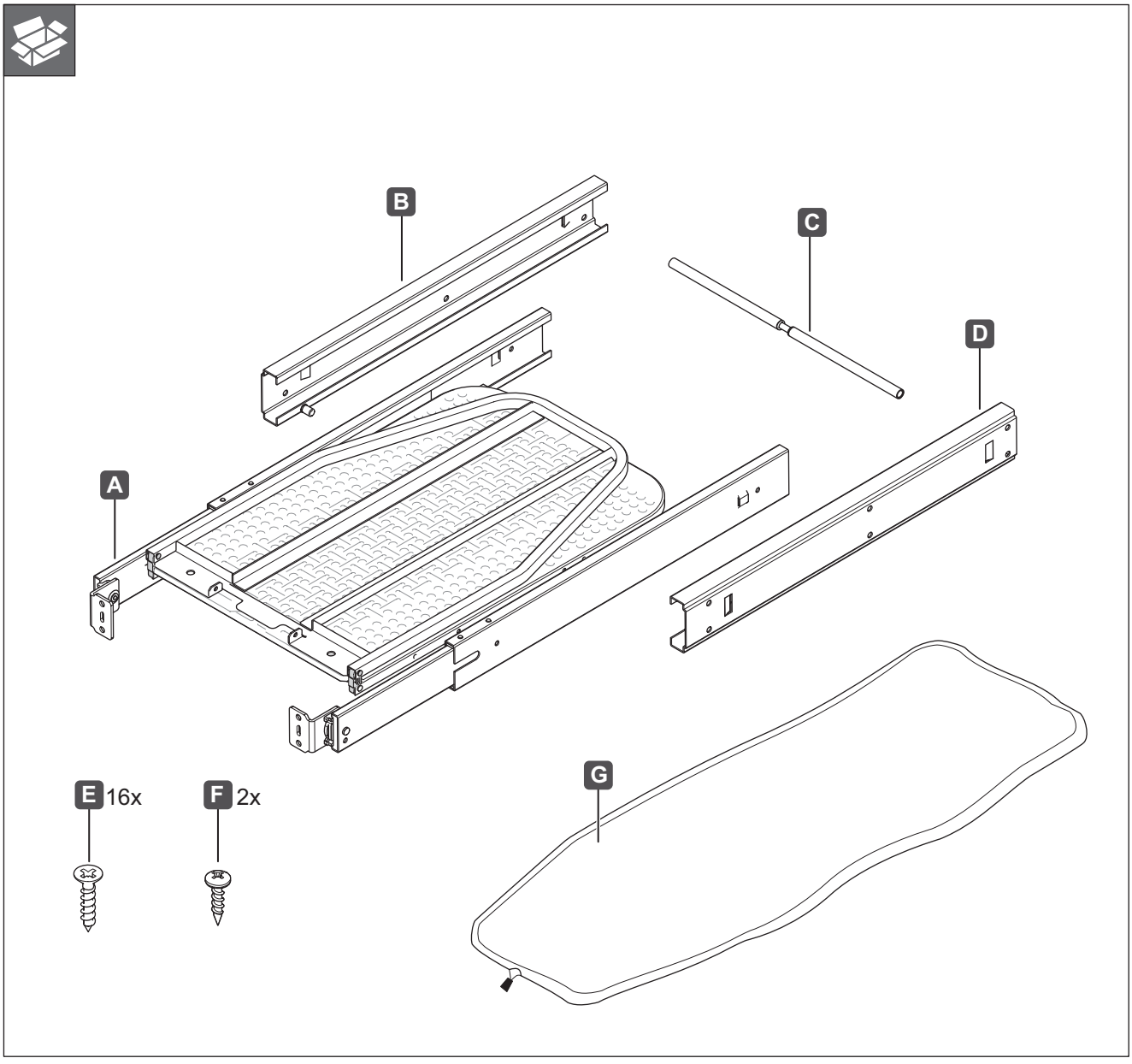

732.25.062

HDE 31.08.2022

i

„mm“

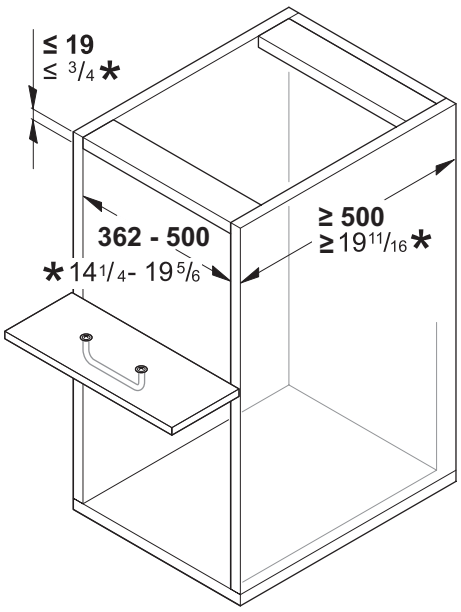

USA Face Frame

* inch

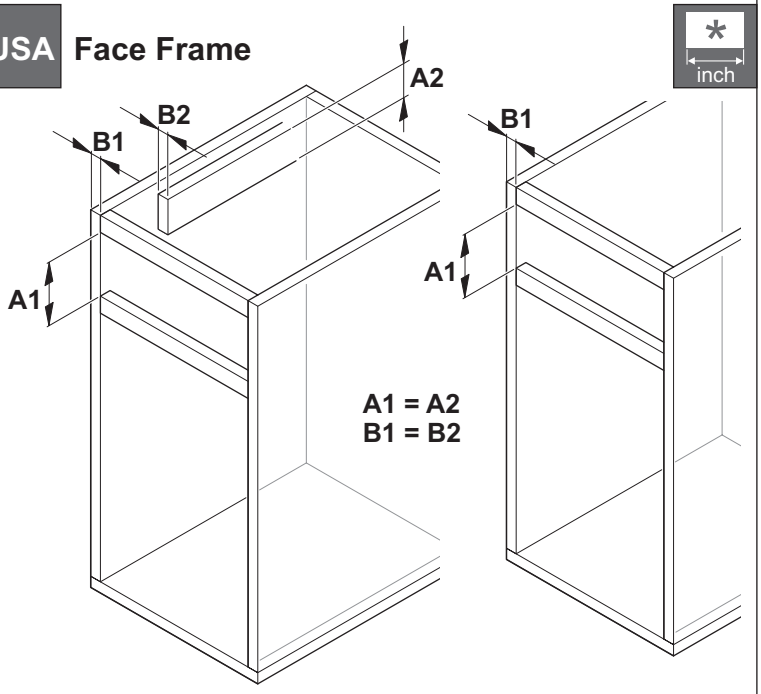

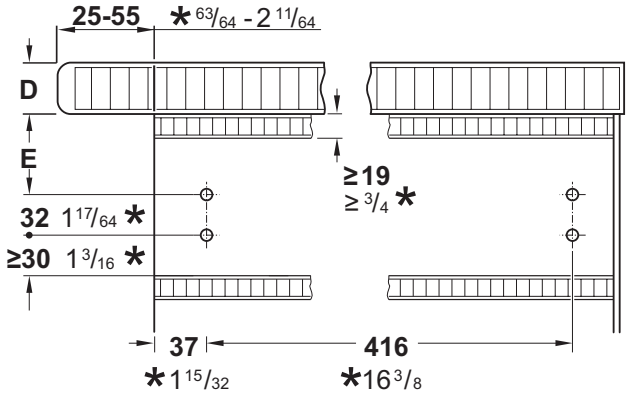

„mm“

D	E
20	86
25	81
30	76
40	66
50	66

* inch

D	F
25/32	3 3/8
63/64	3 3/16
1 3/16	2 63/64
1 37/64	2 19/32
1 31/32	2 19/32

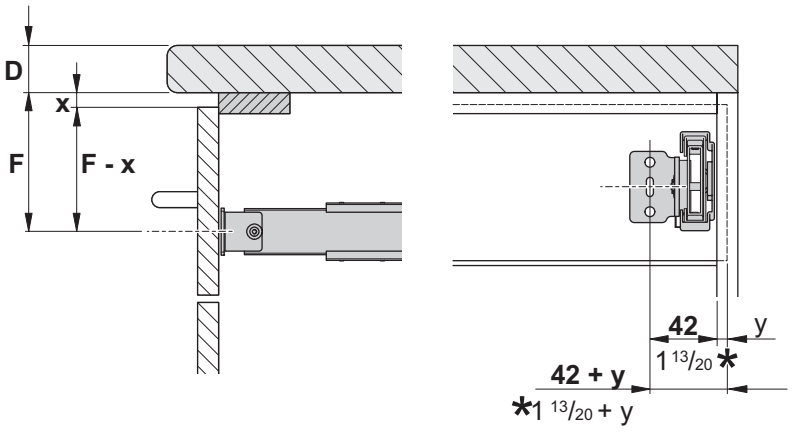

„mm“

D	F
20	102
30	92
40	82
50	82

* inch

D	F
25/32	4
1 3/16	3 5/8
1 37/64	3 1/4
1 31/32	3 1/4

732.25.062

HDE 31.08.2022

1

PZ 2

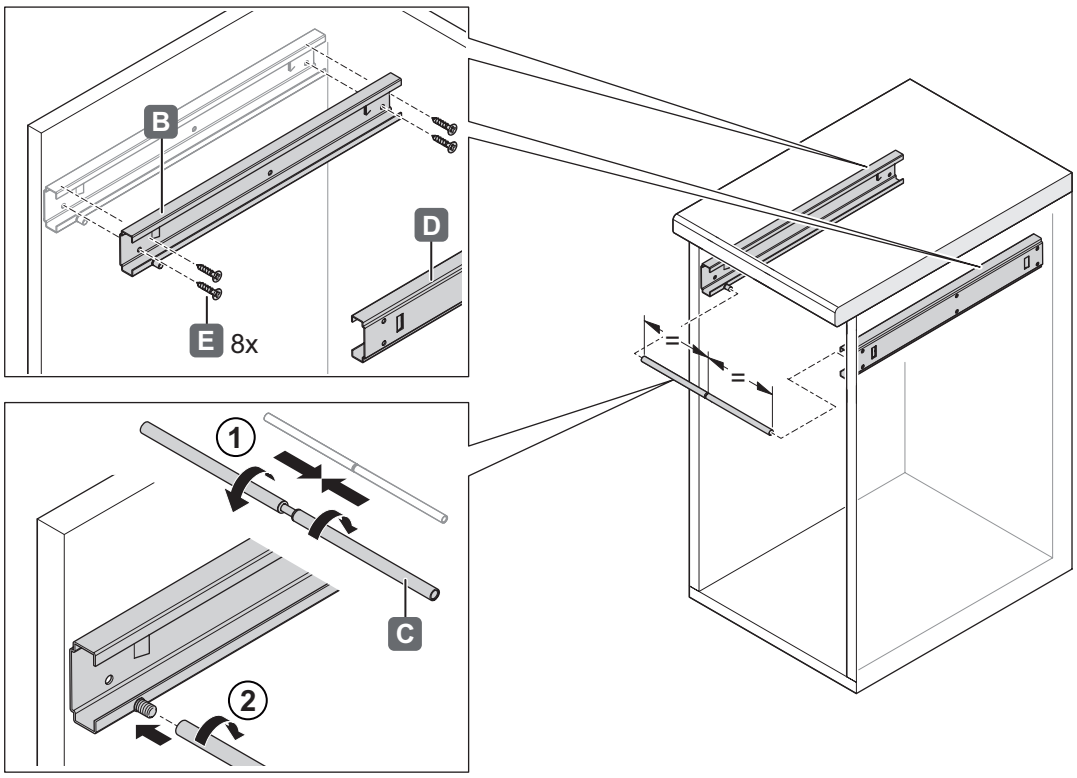

2

SW 3

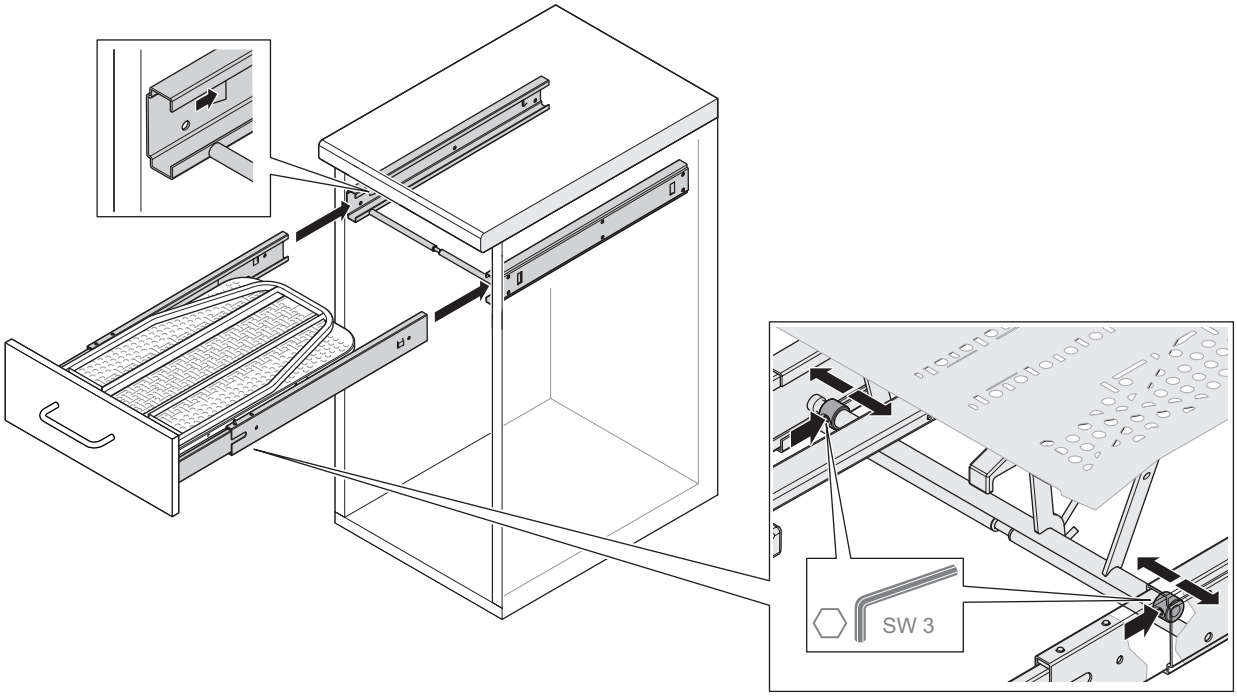

3

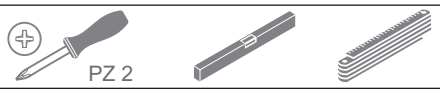

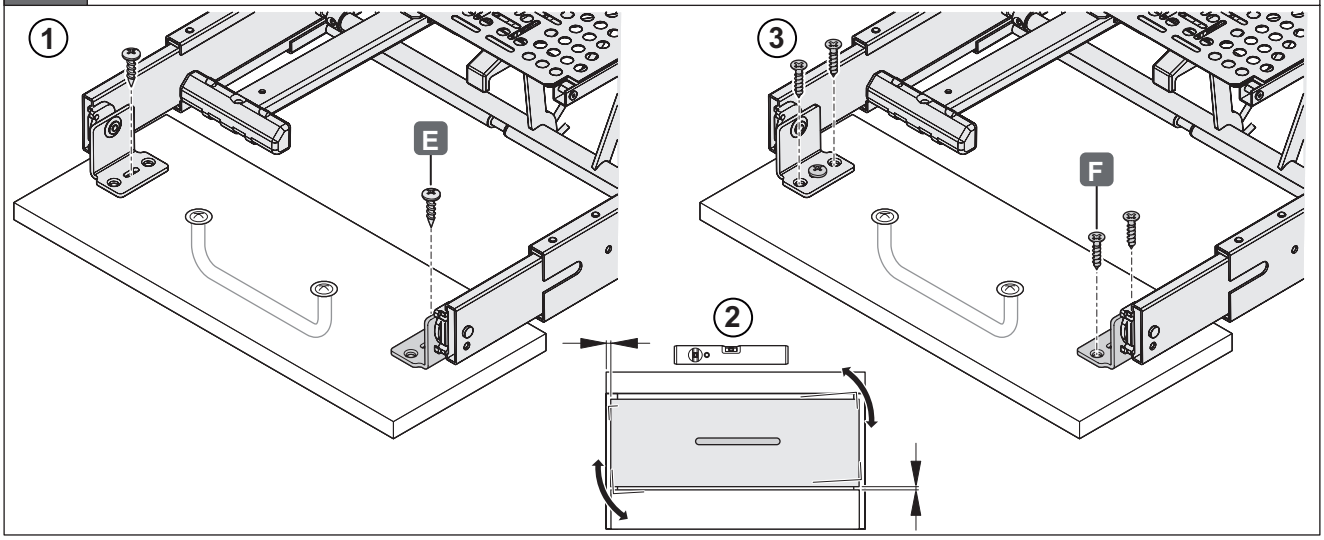

4

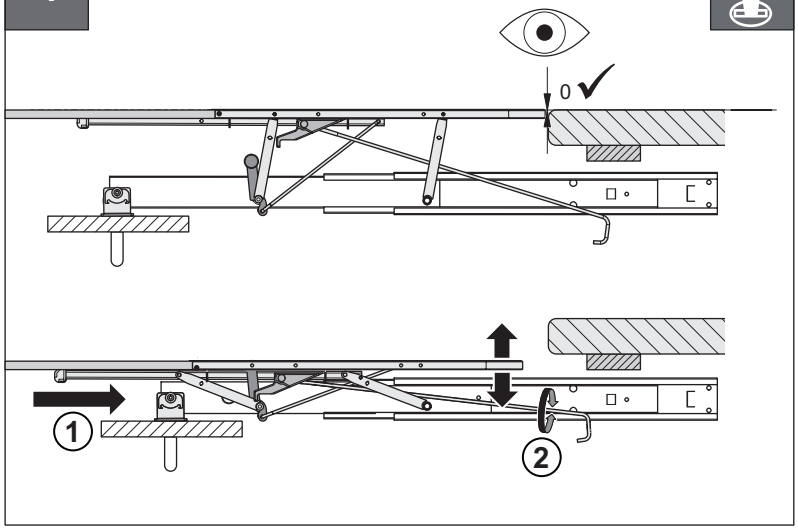

5

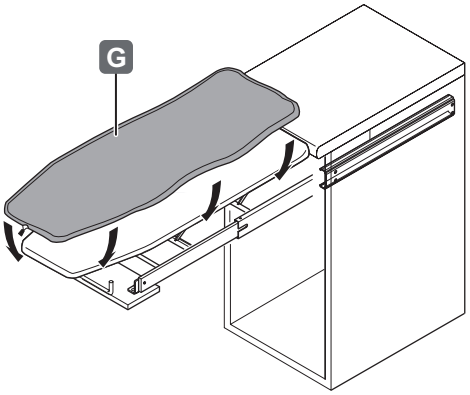

i

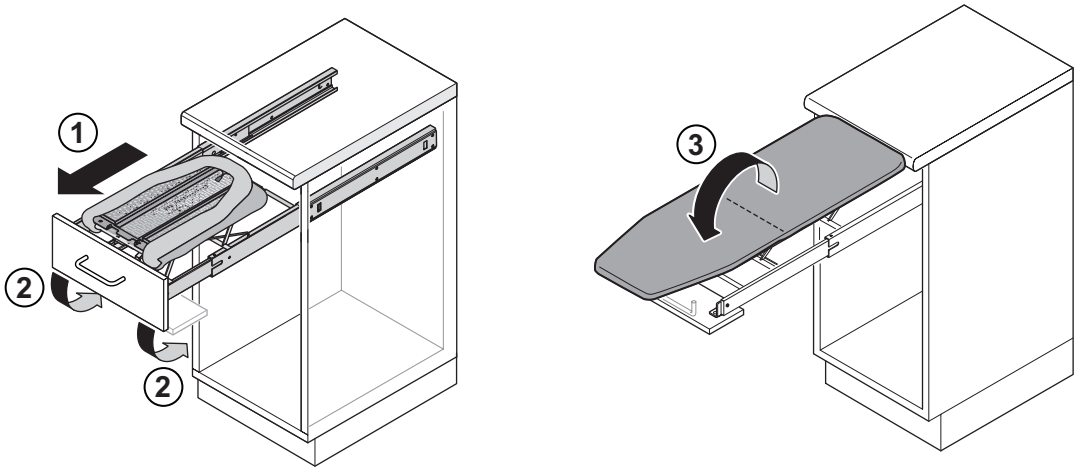

732.25.062

HDE 31.08.2022

Subject to alteration

© 2022 by Häfele SE & Co KG
Adolf-Häfele-Str. 1 · D-72202 Nagold · www.hafele.com