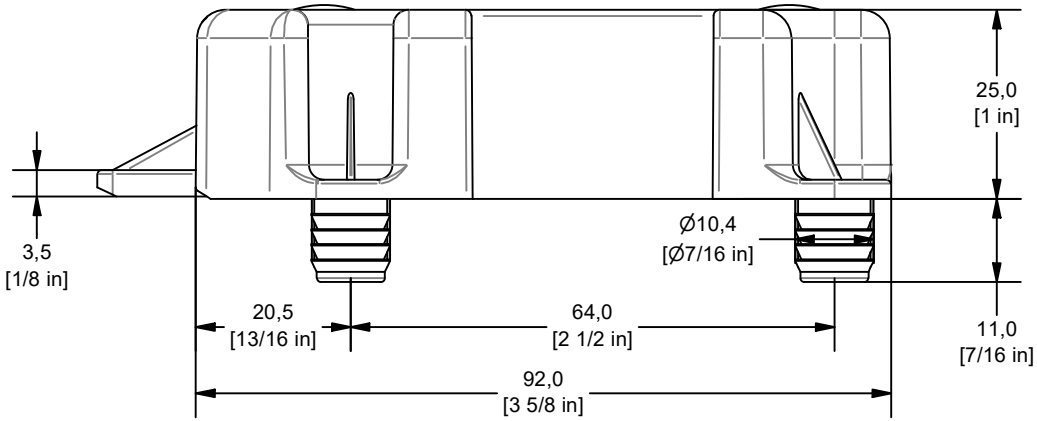

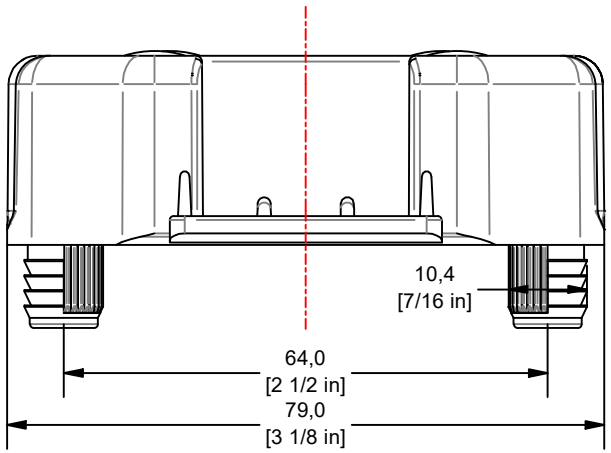

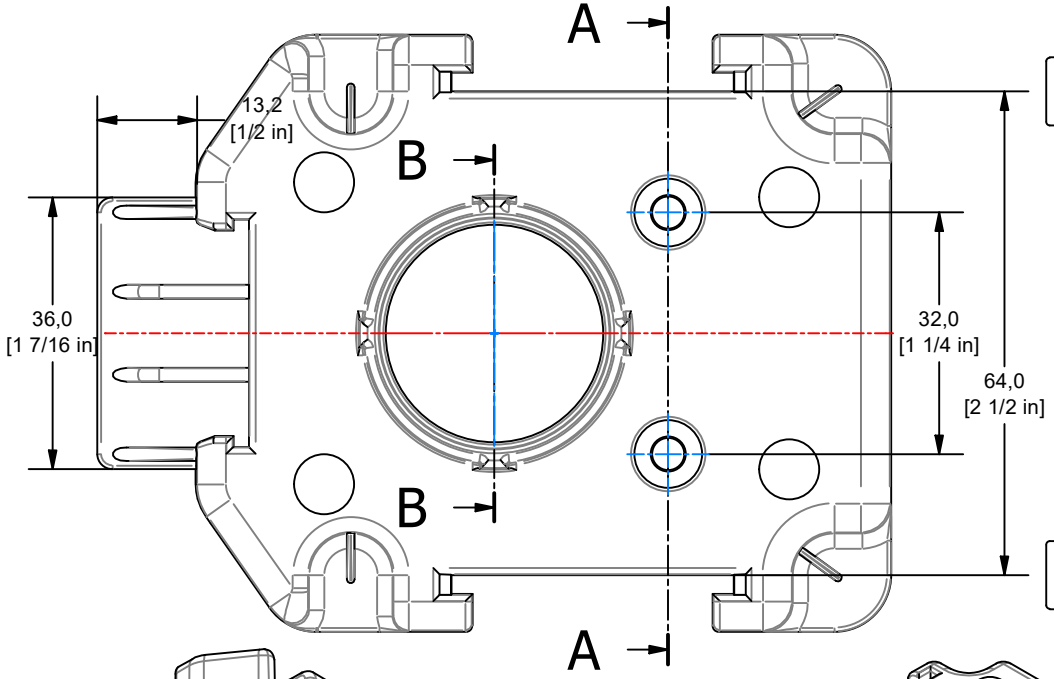

A-A (1 : 1)

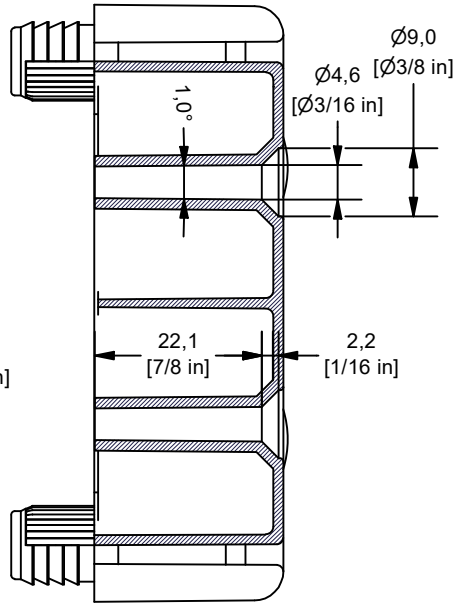

B-B (1 : 1)

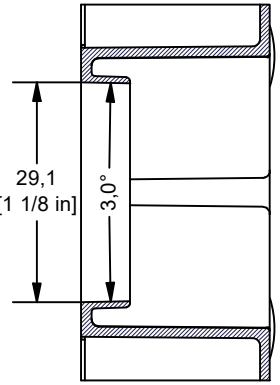

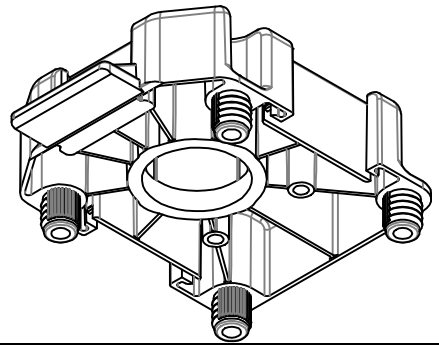

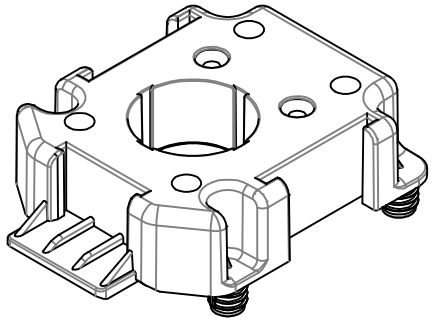

REVISION	-
ITEM/CATALOG NUMBER	637.76.334-69_0675
DRAWING NUMBER	
TITLE	Press fit plate
MATERIAL	Plastic
FINISH	Black
DRAWN BY:	H/NPG
APPROVED BY:	SH
DATE:	11/6/2023
SCALE:	1 : 1
TOLERANCE SPECIFICATION	ISO E
SIZE	A
SHEET	1 OF 1

NOTICE:
THIS DRAWING AND ALL INFORMATION THEREON IS THE PROPERTY OF:
HÄFELE
THIS DRAWING AND INFORMATION THEREON IS CONFIDENTIAL, MUST NOT BE MADE PUBLIC, COPIED OR USED TO DISADVANTAGE OF SAID HAFELE AMERICA CO. IT IS SUBJECT TO RETURN ON DEMAND.
© 2017 HAFELE AMERICA CO.