# Mounting Instructions

HÄFELE Lighting

**Item No.: 833.74.5XX, 833.76.XXX**

# LED 2103, 2104, 3103, 3104, 3105

| ~ / = | 12 V System / 24 V System | W/m | max. (m) 20 W | 40 W | 60 W | 90 W | 120 W | mm/in | $T_A$ |
|---|---|---|---|---|---|---|---|---|---|
| Loox 12 V | **LED 2103** | 4.8 | 4.1 | 4.8 | 12.5 | | | 5,000 x 8 x 1.9 (196 7/8" x 5/16" x 1/16") | -20° C–+45° C -4° F–+113° F |
| | **LED 2104** | 9.6 | 2.0 | 4.1 | 8.3 | | | | |
| Loox 24 V | **LED 3103** | 4.8 | 4.1 | 8.3 | 12.5 | 18.7 | 25.0 | 50,000 x 8 x 1.9 (1968 1/2" x 5/16" x 1/16") | |
| | **LED 3104** | 9.6 | 2.0 | 4.1 | 6.2 | 9.3 | 12.5 | | |
| | **LED 3105** | 14.4 | 1.3 | 2.7 | 4.1 | 6.2 | 8.3 | | |

Supplied with: LED ribbon, mounting instructions.

mm/in

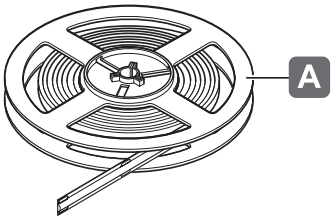


Additional/optional items.

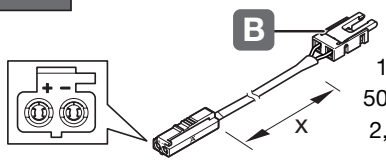


| x | 12 V |
|---|---|
| 100 (3 15/16") | 833.74.694 |
| 500 (19 11/16") | 833.74.695 |
| 2,000 (78 3/4") | 833.74.696 |

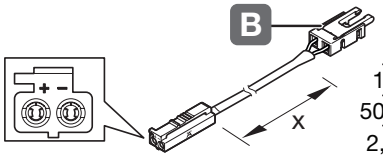


| x | 24 V |
|---|---|
| 100 (3 15/16") | 833.75.762 |
| 500 (19 11/16") | 833.75.763 |
| 2,000 (78 3/4") | 833.75.764 |

Additional/optional items.

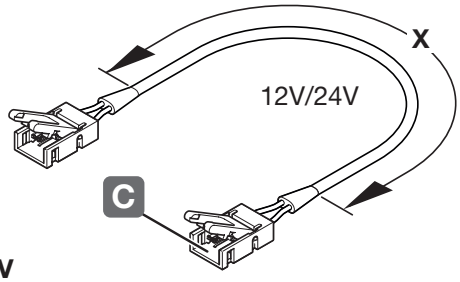


| x | 12V/24V |
|---|---|
| 50 (2") | 833.75.765 |
| 2,000 (78 3/4") | 833.75.766 |

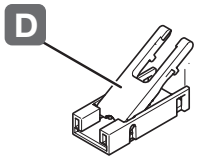


833.75.767

IP20

Suitable for use within closet storage spaces when utilized with profile and lens.

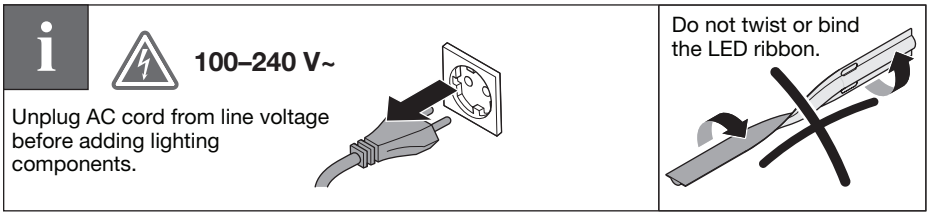
100–240 V~
Unplug AC cord from line voltage before adding lighting components.
Do not twist or bind the LED ribbon.

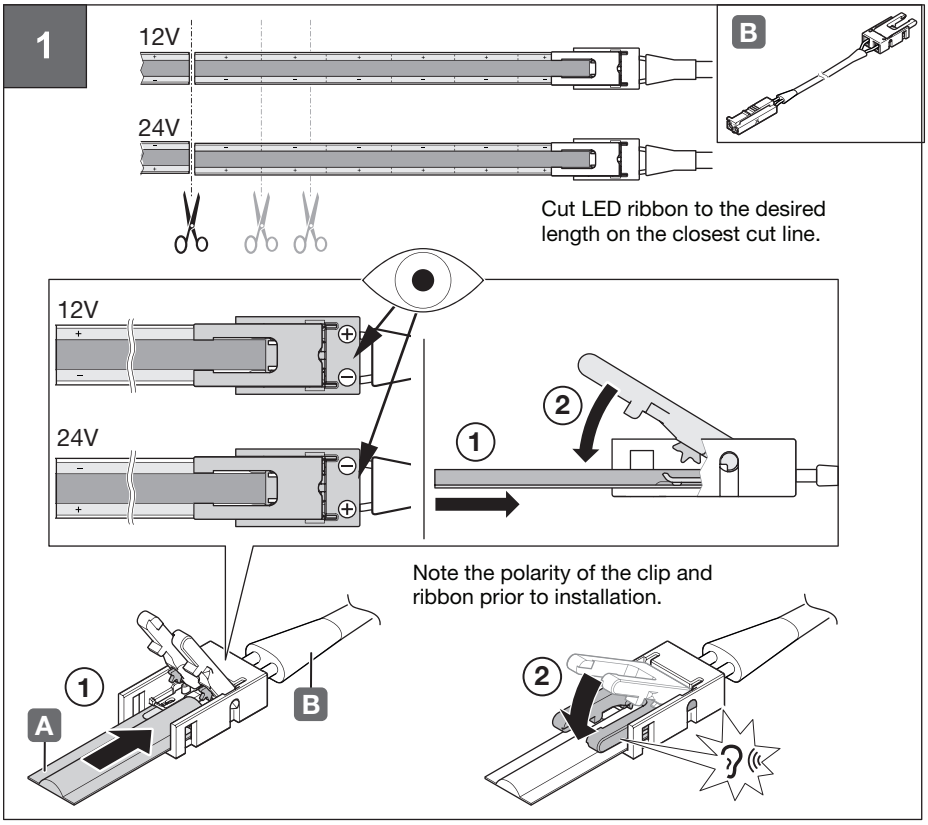
1
12V
24V
B
Cut LED ribbon to the desired length on the closest cut line.
12V
24V
1
2
Note the polarity of the clip and ribbon prior to installation.
A
B
1
2

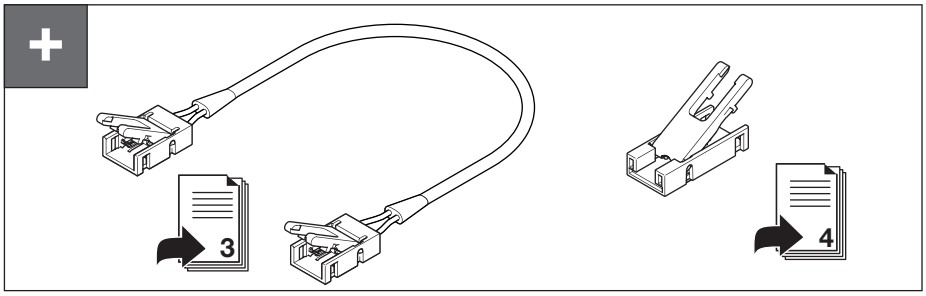
+
3
4

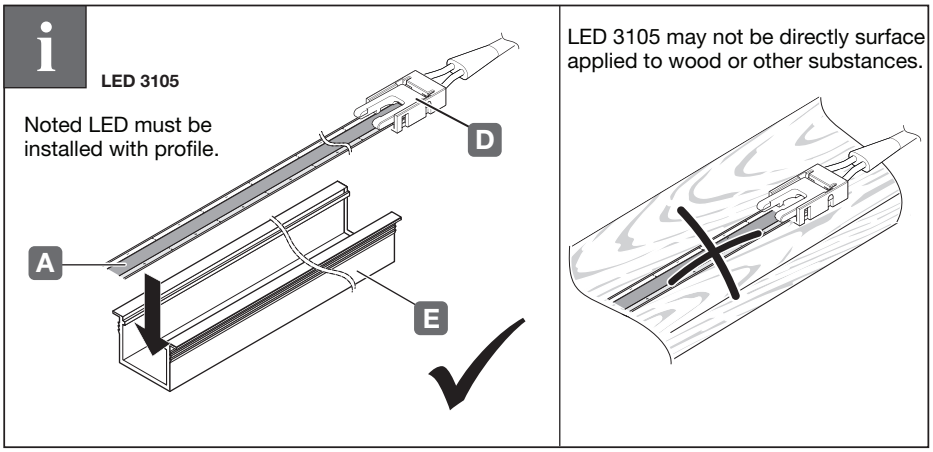
i
LED 3105
Noted LED must be installed with profile.
A
D
E
LED 3105 may not be directly surface applied to wood or other substances.

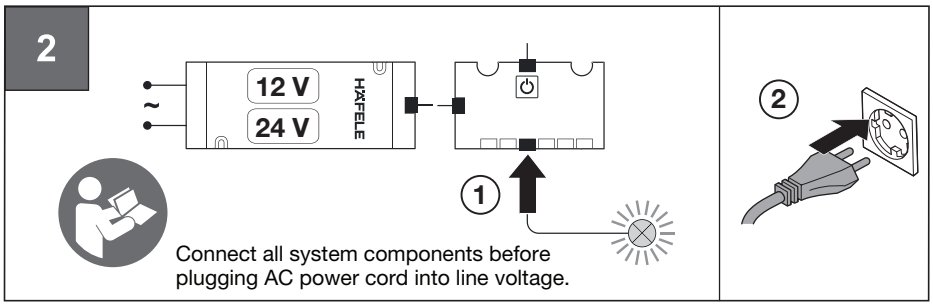
2
12 V
24 V
HAFELE
1
2
Connect all system components before plugging AC power cord into line voltage.

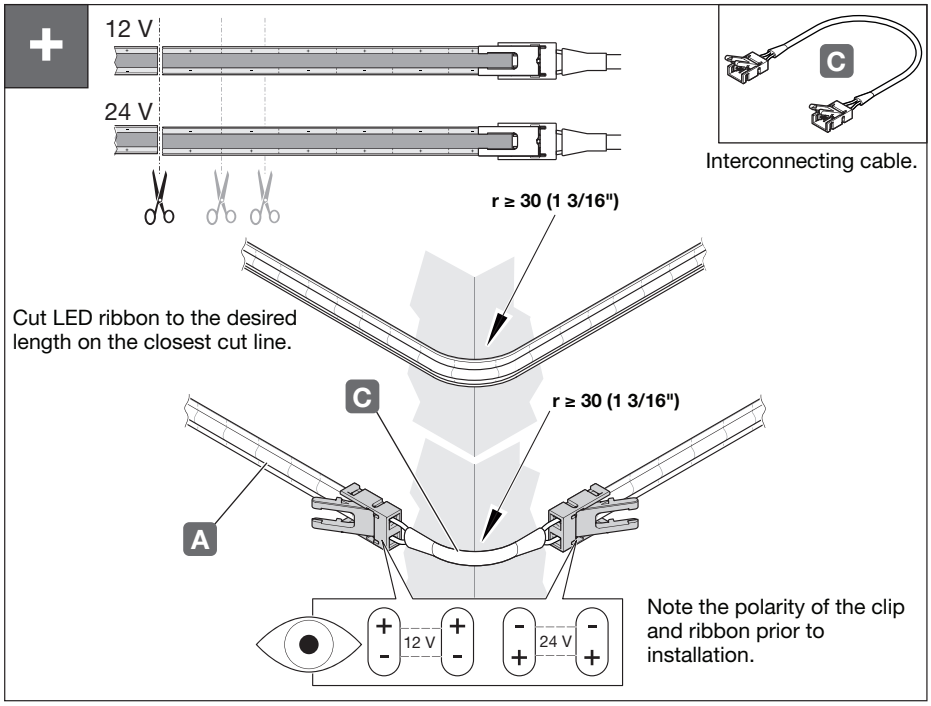
12 V
24 V
C
Interconnecting cable.
r ≥ 30 (1 3/16")
Cut LED ribbon to the desired length on the closest cut line.
C
r ≥ 30 (1 3/16")
A
12 V
24 V
Note the polarity of the clip and ribbon prior to installation.

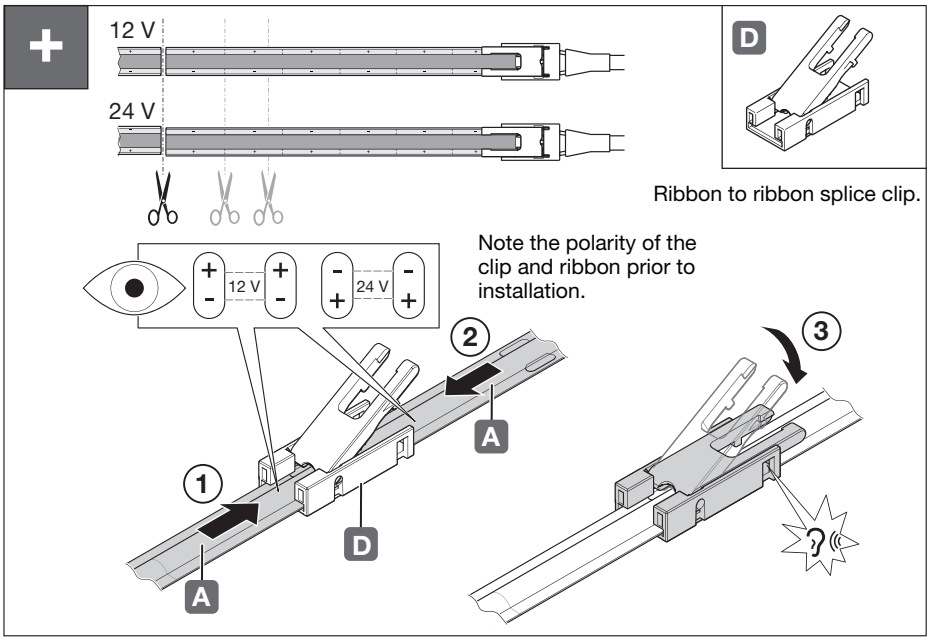
12 V
24 V
D
Ribbon to ribbon splice clip.
Note the polarity of the clip and ribbon prior to installation.
12 V
24 V
1
2
3
A
D
A